Sumitomo Drive Technologies

Always on the Move

DRIVEN FOR PURITY

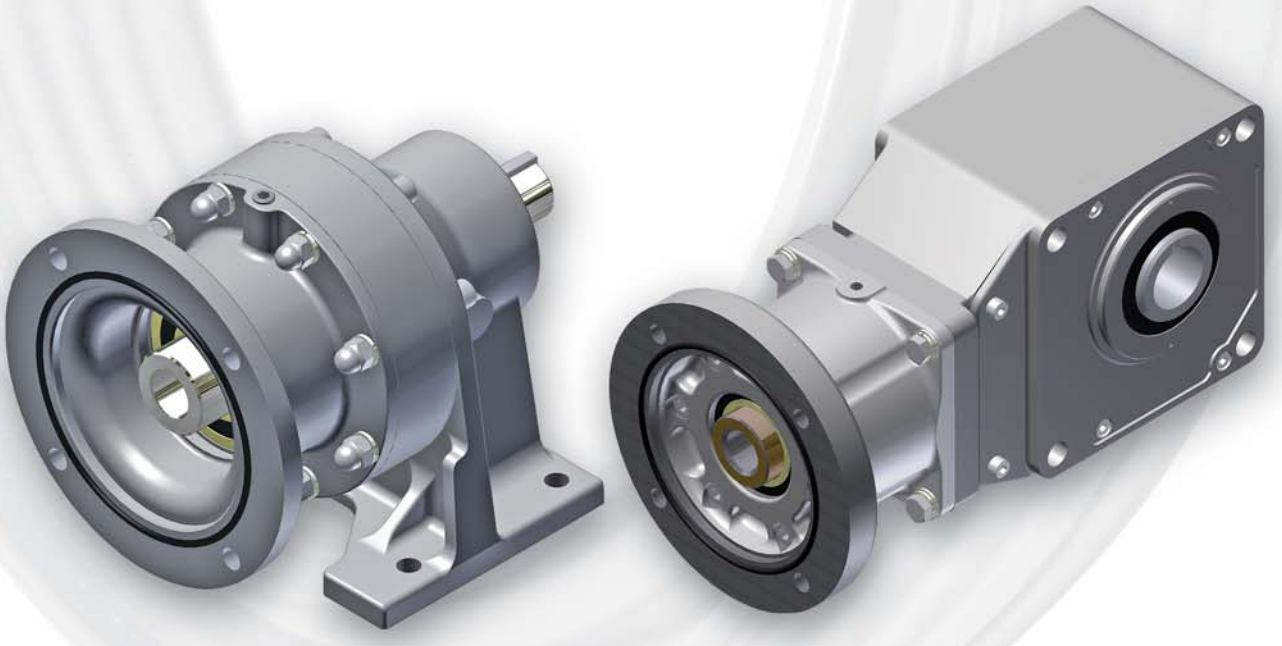

DRIVEN FOR PURITY

Here's food for thought: according to the Bureau of Census Annual Survey of Manufacturers, 57% of a company's sales dollar is spent on materials and capital equipment. Choosing the right equipment is more important than ever, especially in food and beverage processing. An equipment failure is a problem; contamination is a catastrophe. Food processing equipment standards of design and production are more stringent every day and specify today's aggressive high-pressure washdown requirements.

Sumitomo Drive Technologies' Cyclo® and Hyponic® food-grade drives feature a unique rotating, multi-lipped seal that protects drives and keeps food safe. Their fully enclosed construction stands up to aggressive cleaning, including high pressure washing. Food-grade lubricants and severe-duty antimicrobial food-grade powder coating provide additional levels of safety. And like all Sumitomo drives, the food-grade products are built to last, giving you the lowest possible life-cycle cost and the highest level of process purity.

Cyclo® Quill Reducer

Hyponic® Quill Reducer

FLOUR MILLING

Because the milling process transforms grains into powders, process equipment must operate in dusty environmental conditions. Sumitomo Drive Technologies offers a variety of drives designed to address the milling industry's unique needs. Stainless steel shafts, grease lubricated designs, dusty duty breather modifications and explosion-proof motors are just a few options that help Sumitomo drive the flour milling industry.

Applications

Agitators	Cyclo 6000	Cyclo BBB	Cyclo HBB
Batching Equipment	Cyclo 6000	Hyponic	
Blender	Cyclo 6000	Cyclo BBB	HSM
Bucket Excavators	Paramax 9000		
Conveyors	Cyclo 6000	Hyponic	Cyclo BBB
Overhead Doors	Hyponic	Cyclo 6000	Altax
Drying Drum	Cyclo 6000	Cyclo BBB	
Feeders	Cyclo 6000	Cyclo BBB	Hyponic
Filler Equipment	Cyclo 6000	Hyponic	Altax
Loaders/Unloaders	Hyponic	Cyclo 6000	Altax
Mixing Drum	Cyclo BBB	Cyclo 6000	
Palletizer	Cyclo 6000	Servo 6000	IB Precision Gearhead
Packaging Equipment	Cyclo 6000	Hyponic	Astero
Pumps	Paramax 9000	Beier Variator	
Screw Conveyors	Cyclo BBB	HSM	Cyclo 6000
Shrink Wrapping	IB Precision Gearhead	Servo 6000	Astero
Wastewater Treatment	Cyclo BBB	Cyclo 6000	Paramax 9000

SUGAR MANUFACTURING

Speed reduction equipment used by the sugar industry is exposed to extreme ambient conditions and must withstand high torque loads for long periods. Sumitomo Drive Technologies is a proven major supplier in the sugar industry because their gear drives withstand peak seasons of sugar milling and provide long service life under the most difficult application conditions.

Applications

Batching Equipment	Cyclo 6000	Hyponic	
Conveyors	Cyclo 6000	Hyponic	Cyclo BBB
Crystallizer	Cyclo 6000	Cyclo HBB	
Overhead Doors	Hyponic	Cyclo 6000	Altax
Drag Conveyors	Cyclo 6000	HSM	
Filler Equipment	Cyclo 6000		
Loaders/Unloaders	Hyponic	Cyclo 6000	Altax
Mixing Drum/Mixer	Cyclo BBB	Cyclo 6000	
Palletizer	Cyclo 6000	Servo 6000	IB Precision Gearhead
Packaging Equipment	Cyclo 6000	Hyponic	Astero
Pumps	Paramax 9000	Beier Variator	
Shrink Wrapping	IB Precision Gearhead	Servo 6000	Astero
Vacuum Evaporator	Cyclo 6000		
Wastewater Treatment	Cyclo BBB	Cyclo 6000	Paramax 9000

CHOCOLATE MANUFACTURING

Shelling, roasting and grinding cacao beans to make chocolate cacao products and chocolate confectioneries are demanding, continuous processes. Blended syrups used in the industry are usually concentrated and viscous, requiring low speed gear drives that are sanitary and clean. In addition, the sugar used in chocolate manufacturing is highly corrosive. Sumitomo Drive Technologies' Cyclo® and Hyponic® drives are ideal for these demanding applications.

Applications

Batching Equipment	Cyclo 6000	Hyponic	Astero
Conveyors	Cyclo 6000	Hyponic	Cyclo BBB
Carousel Conveyor	Cyclo 6000	Hyponic	Cyclo BBB
Chiller	Cyclo 6000	Cyclo BBB	
Overhead Doors	Hyponic	Cyclo 6000	Altax
Filler Equipment	Cyclo 6000	Hyponic	Altax
Industrial Robot	Fine Cyclo	IB Precision Gearhead	
Loader/Unloader	Hyponic	Cyclo 6000	Altax
Palletizer	Cyclo 6000	Servo 6000	IB Precision Gearhead
Packaging Equipment	Cyclo 6000	Hyponic	Astero
Pumps	Paramax 9000	Beier Variator	
Shrink Wrapping	IB Precision Gearhead	Servo 6000	Astero
Wastewater Treatment	Cyclo BBB	Cyclo 6000	Paramax 9000

FRUIT & VEGETABLE

Sumitomo Drive Technologies offers gear drives that are sanitary and safe for frozen fruit, frozen juices, frozen vegetables and frozen specialty foods, as well as canned, pickled, and dried fruits, vegetables and specialty foods.

Applications

Batching Equipment	Cyclo 6000	Hyponic	
Blender	Cyclo 6000		
Conveyors	Cyclo 6000	Hyponic	Cyclo BBB
Carousel Conveyor	Cyclo 6000	Hyponic	Cyclo BBB
Chiller	Cyclo 6000	Cyclo BBB	
Extruder	Cyclo 6000		
Overhead Doors	Hyponic	Cyclo 6000	Altax
Filler Equipment	Cyclo 6000	Hyponic	Altax
Grinder	Cyclo 6000	Paramax 9000	Cyclo BBB
Industrial Robot	Fine Cyclo	IB Precision Gearhead	
Loader/Unloader	Hyponic	Cyclo 6000	Altax
Palletizer	Cyclo 6000	Servo 6000	IB Precision Gearhead
Packaging Equipment	Cyclo 6000	Hyponic	Astero
Proofer	Hyponic	Cyclo 6000	Altax
Pumps	Paramax 9000	Beier Variator	
Shrink Wrapping	IB Precision Gearhead	Servo 6000	Astero
Wastewater Treatment	Cyclo BBB	Cyclo 6000	Paramax 9000

DAIRY PRODUCTS

Since many dairy products have a short shelf life, production needs to be constant and reliable. Sumitomo Drive Technologies' gear drives have an exceptionally long service life and offer dependable solutions for these demanding operations.

Applications

Agitators	Cyclo 6000	Cyclo BBB	Hyponic	Astero
Batching Equipment	Cyclo 6000	Hyponic		
Blender	Cyclo 6000			
Conveyors	Cyclo 6000	Hyponic	Cyclo BBB	
Chiller	Cyclo 6000	Cyclo BBB		
Overhead Doors	Hyponic	Cyclo 6000	Altax	
Filler Equipment	Cyclo 6000	Hyponic	Altax	
Loader/Unloader	Hyponic	Cyclo 6000	Altax	
Mixing Drum/Mixer	Cyclo BBB	Cyclo 6000		
Palletizer	Cyclo 6000	Servo 6000	IB Precision Gearhead	
Packaging Equipment	Cyclo 6000	Hyponic	Astero	
Pumps	Paramax 9000	Beier Variator	Cyclo 6000	Cyclo BBB
Shrink Wrapping	IB Precision Gearhead	Astero	Servo 6000	
Wastewater Treatment	Cyclo BBB	Cyclo 6000	Paramax 9000	

MEAT PROCESSING

Meat processing is a very severe and harsh environment. To assure process purity, equipment sanitation is essential. Therefore, high-pressure washdown is a common specification for equipment. Sumitomo Drive Technologies' High Pressure Washdown Package for the new Food-Grade Cyclo® and Hyponic® provides the solution for these critical applications.

Applications

Batching Equipment	Cyclo 6000	Hyponic		
Conveyors	Cyclo 6000	Cyclo Overhead Conveyor	Hyponic	Cyclo BBB
Chiller	Cyclo 6000	Cyclo BBB		
Overhead Doors	Hyponic	Cyclo 6000	Altax	
Fabrication	Hyponic	Cyclo 6000	Cyclo BBB	
Filler Equipment	Cyclo 6000			
Grinder	Paramax 9000	Cyclo 6000		
Industrial Robot	Fine Cyclo	IB Precision Gearhead		
Loader/Unloader	Hyponic	Cyclo 6000	Altax	
Palletizer	Cyclo 6000	Servo 6000	IB Precision Gearhead	
Packaging Equipment	Cyclo 6000	Hyponic	Astero	
Pumps	Cyclo 6000	Cyclo BBB	Paramax 9000	Beier Variator
Rendering	Cyclo HBB	Cyclo BBB	Cyclo 6000	
Shrink Wrapping	IB Precision Gearhead	Servo 6000	Astero	
Wastewater Treatment	Cyclo BBB	Cyclo 6000	Paramax 9000	

POULTRY PROCESSING

Today, Americans consume more chicken than any other type of meat. The demand for poultry products keeps processing plants operating at maximum utilization. Speed reduction equipment driving poultry-processing machines provides unique maintenance challenges. Sumitomo offers products engineered for severe, high shock applications that increase process uptime and reliability. The new Food-Grade Cyclo® and Hyponic® High Pressure Washdown Packages are ideal for the extreme demands of the poultry processing industry.

Applications

Batching Equipment	Cyclo 6000	Hyponic		
Conveyors	Cyclo 6000	Cyclo Overhead Conveyor	Hyponic	Cyclo BBB
Chiller	Cyclo 6000	Cyclo BBB		
Overhead Doors	Hyponic	Cyclo 6000	Altax	
Filler Equipment	Cyclo 6000	Hyponic	Altax	
Grinder	Cyclo 6000	Paramax 9000	Cyclo BBB	Cyclo HBB
Industrial Robot	Fine Cyclo	IB Precision Gearhead		
Loader/Unloader	Hyponic	Cyclo 6000	Altax	
Palletizer	Cyclo 6000	Servo 6000	IB Precision Gearhead	
Packaging Equipment	Cyclo 6000	Hyponic	Astero	
Pumps	Paramax 9000	Beier Variator		
Shrink Wrapping	IB Precision Gearhead	Servo 6000	Astero	
Wastewater Treatment	Cyclo BBB	Cyclo 6000	Paramax 9000	

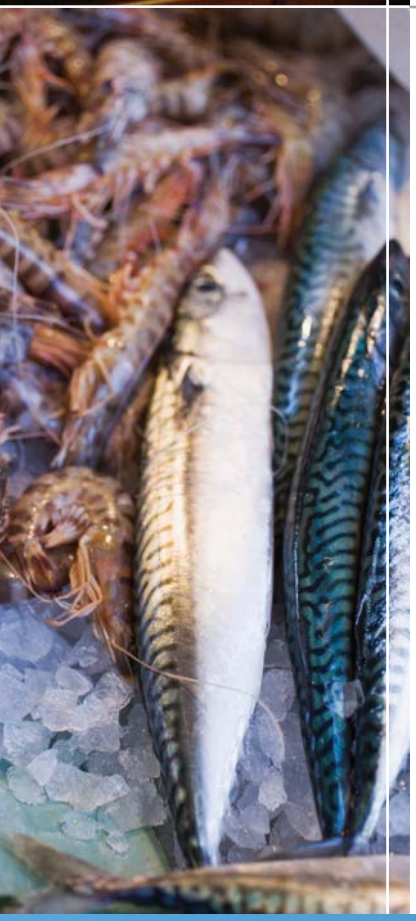

SEAFOOD PROCESSING

Whether it is fresh, frozen, pre-cooked, shelled, unshelled, or canned – seafood is a very popular dish worldwide. Seafood processors must guard against cross contamination and other threats that compromise food safety. Sumitomo Drive Technologies offers very efficient, compact and easy to clean gear drives that are ideal for the seafood industry.

Applications

Batching Equipment	Cyclo 6000	Hyponic		
Conveyors	Cyclo 6000	Cyclo Overhead Conveyor	Hyponic	Cyclo BBB
Chiller	Cyclo 6000	Cyclo BBB		
Overhead Doors	Hyponic	Cyclo 6000	Altax	
Filler Equipment	Cyclo 6000	Hyponic	Altax	
Grinder	Cyclo 6000	Cyclo BBB	Cyclo HBB	
Industrial Robot	Fine Cyclo	IB Precision Gearhead		
Loader/Unloader	Hyponic	Cyclo 6000	Altax	
Palletizer	Cyclo 6000	Servo 6000	IB Precision Gearhead	
Packaging Equipment	Cyclo 6000	Hyponic	Astero	
Pumps	Cyclo 6000	Hyponic	Paramax 9000	Beier Variator
Refiners	Cyclo 6000			
Screw Press	Cyclo 6000			
Shrink Wrapping	IB Precision Gearhead	Servo 6000	Astero	
Wastewater Treatment	Cyclo BBB	Cyclo 6000	Paramax 9000	

BAKERIES AND TORTILLA MANUFACTURING

From bread, cookies, crackers and cakes to pasta and tortillas, bakery products go through many changes from dough to packaged baked goods. These processes require gear drives with features to meet the tough application demands. Sumitomo Drive Technologies offers an extensive product range for almost every baked good process requirement.

Applications

Agitators	Cyclo 6000	Cyclo BBB	Cyclo HBB
Batching Equipment	Cyclo 6000	Hyponic	Cyclo BBB
Blender	Cyclo 6000		
Conveyors	Cyclo 6000	Hyponic	
Chiller	Cyclo 6000	Cyclo BBB	
Overhead Doors	Hyponic	Cyclo 6000	Altax
Extruder	Cyclo 6000		
Feeders	Cyclo 6000	Cyclo BBB	Cyclo HBB
Filler Equipment	Cyclo 6000	Hyponic	Altax
Industrial Robot	Fine Cyclo	IB Precision Gearhead	
Loader/Unloader	Hyponic	Cyclo 6000	Altax
Mixing Drum/Mixer	Cyclo BBB	Cyclo 6000	
Palletizer	Cyclo 6000	Servo 6000	IB Precision Gearhead
Packaging Equipment	Cyclo 6000	Hyponic	Astero
Proofer	Hyponic	Cyclo 6000	Altax
Pumps	Paramax 9000	Beier Variator	
Sheeter	Hyponic	Cyclo BBB	
Shrink Wrapping	IB Precision Gearhead	Servo 6000	Astero
Wastewater Treatment	Cyclo BBB	Cyclo 6000	Paramax 9000

BEVERAGE MANUFACTURING

Beverage manufacturing is highly competitive so efficiency matters. Sumitomo Drive Technologies products provide a solution to the tough demands of Beverage processing applications. The grease lubricated, no maintenance, easy to clean products, provide peace of mind and the knowledge that your process will continue to operate at peak performance.

Applications

Agitators	Cyclo 6000	Cyclo BBB	Cyclo HBB
Batching Equipment	Cyclo 6000	Hyponic	
Blender	Cyclo 6000		
Conveyors	Hyponic	Cyclo 6000	Cyclo BBB
Chiller	Cyclo 6000	Cyclo BBB	
Overhead Doors	Hyponic	Cyclo 6000	Altax
Filler Equipment	Hyponic	Cyclo 6000	IB Precision Gearhead
Industrial Robot	Fine Cyclo	IB Precision Gearhead	
Loader/Unloader	Cyclo 6000	Cyclo BBB	
Mixing Drum/Mixer	Cyclo BBB	Cyclo 6000	
Palletizer	Cyclo 6000	Servo 6000	IB Precision Gearhead
Packaging Equipment	Hyponic	Cyclo 6000	Astero
Pumps	Paramax 9000	Beier Variator	
Shrink Wrapping	IB Precision Gearhead	Servo 6000	Astero
Wastewater Treatment	Cyclo BBB	Cyclo 6000	Paramax 9000

Sumitomo Drive Technologies has a proven track record for manufacturing the most dependable, efficient and long-lasting gear drives available today. We now bring that same reliability – and safety – into the food and beverage industry to meet your needs.

To find out more, contact Sumitomo Drive Technologies or your authorized Sumitomo distributor today.

SUMITOMO SPEED REDUCERS FOR FOOD PROCESSING

INLINE	RIGHT ANGLE	OFFSET PARALLEL	PRECISION	LARGE INDUSTRIAL
Power: 1/8 to 235 HP Ratio: 3:1 to 1,000,000:1 **CYCLO® 6000**	Power: 1/8 to 40 HP Ratio: 11:1 to 26,000:1 + **CYCLO® BBB**	Power: 1/8 to 40 HP Ratio: 11:1 to 26,000:1 + **CYCLO® HBB**	Power: 114 to 4159 lb-in Ratio: 6:1 to 87:1 **SERVO 6000**	
Power: 1/8 to 235 HP Ratio: 3:1 to 1,000,000:1 **CYCLO® OVERHEAD DRIVE**	Power: 1/8 to 15 HP Ratio: 5:1 to 1,440:1 **HYPONIC®**	Power: 1/4 to 300 HP Ratio: 5:1 to 25:1 **HSM**	Torque: 115 to 1124 lb-in Ratio: 5:1 to 45:1 **IB PRECISION GEARHEAD**	Torque: 23,000 to 5,000,000 lb-in Ratio: 6.3:1 to 500:1 **PARAMAX® 9000**
Power: 40 to 90 Watts Ratio: 6:1 to 51:1 **ALTAX®**	Torque: 5.75 to 260.47 lb-in Ratio: 5:1 to 240:1 **ASTERO®**		Torque: 1318 to 54,339 lb-in Ratio: 29:1 to 179:1 **FINE CYCLO®**	
Torque: 1.15 to 173.47 lb-in Ratio: 3:1 to 200:1 **ASTERO®**				

Sumitomo Machinery Corporation of America
4200 Holland Boulevard, Chesapeake, VA 23323 • Tel: 757-485-3355 • Fax: 757-485-7490
www.sumitomodrive.com • E-mail:customercare@suminet.com

Brochure 01.083.51.001